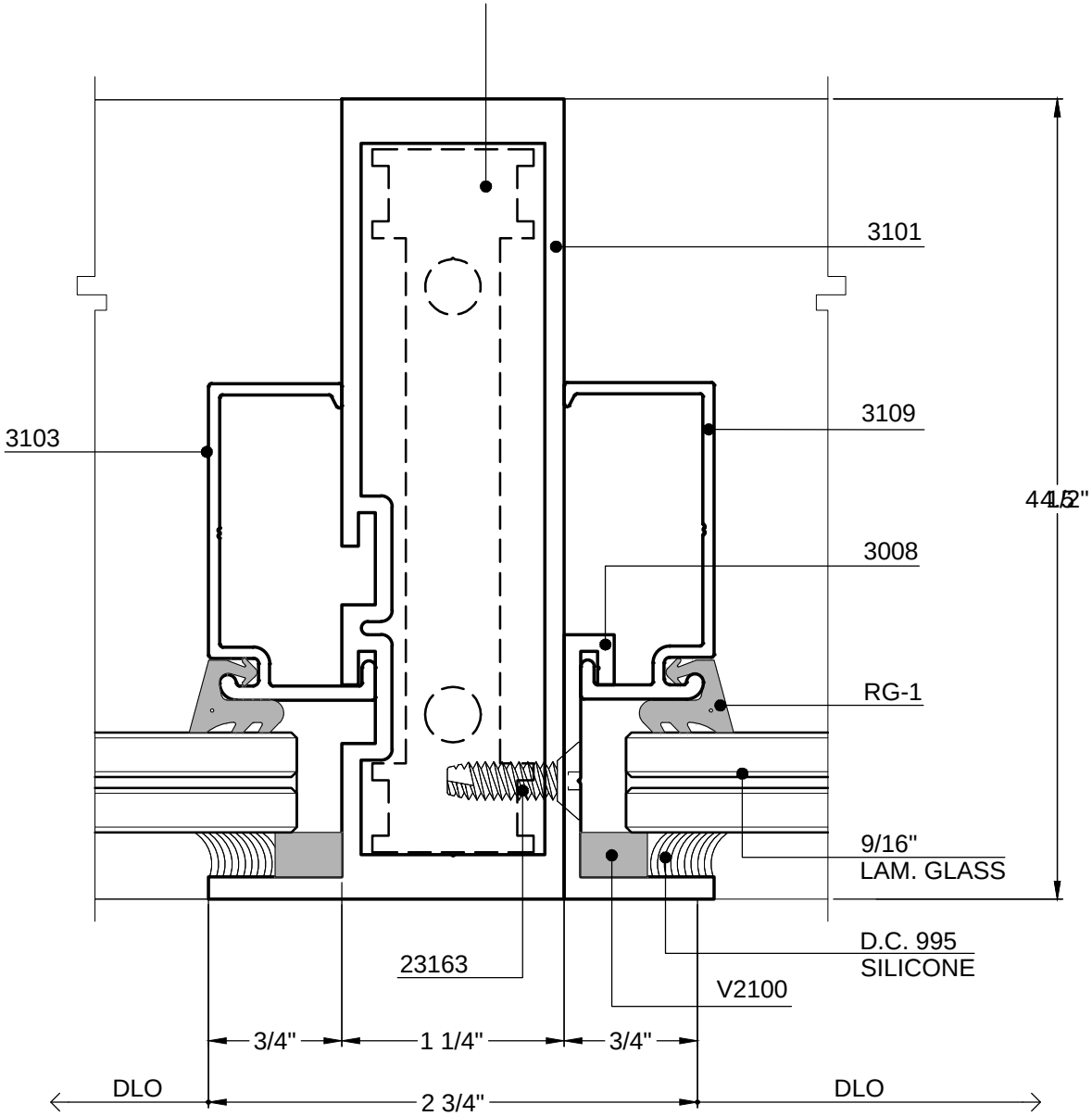
3101
3109
3103
44 1/2"
3008
RG-1
9/16"
LAM. GLASS
D.C. 995
SILICONE
23163
V2100
3/4"
1 1/4"
3/4"
DLO
2 3/4"
DLO